Lowther *Bass* 200
Protected by Patent Application:
No: 8134117

Drawing No: 259/AUG81/RPH.

Lowther Loudspeaker Systems Limited.
P.O. Box 184, Sidcup. Kent DA14 4NL
ENGLAND UK
Telephone: +44 20 8300 9166
Fax: +44 20 8308 0778

Website: http://www.lowtherloudspeakers.co.uk
http://www.lowtherloudspeakers.com
e-mail: sales@lowtherloudspeakers.co.uk
sales@lowtherloudspeakers.com

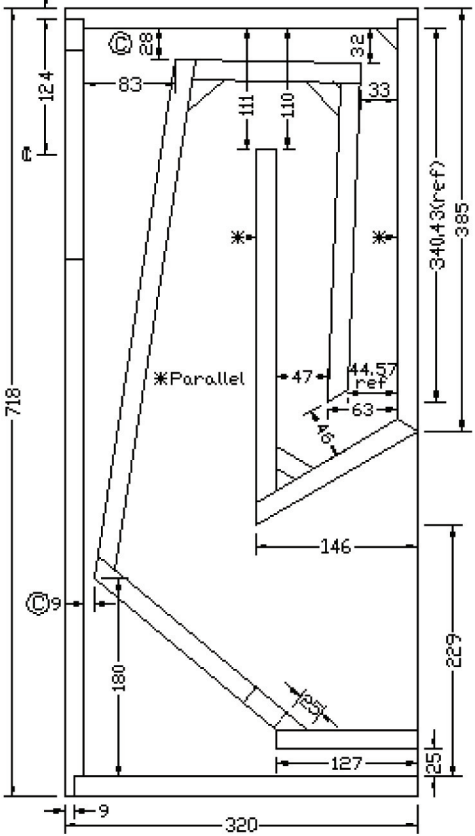

Cross section on Side View.

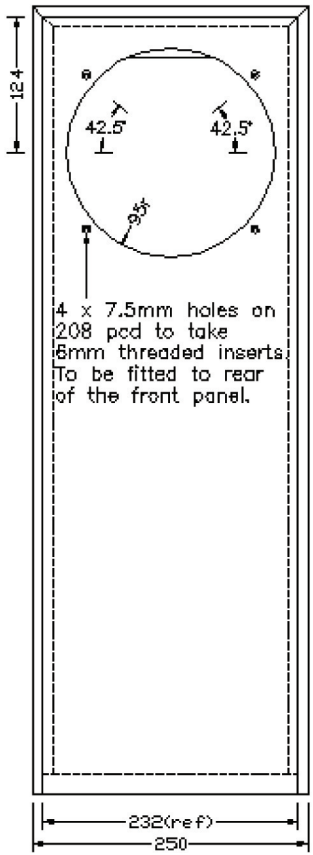

Front View.

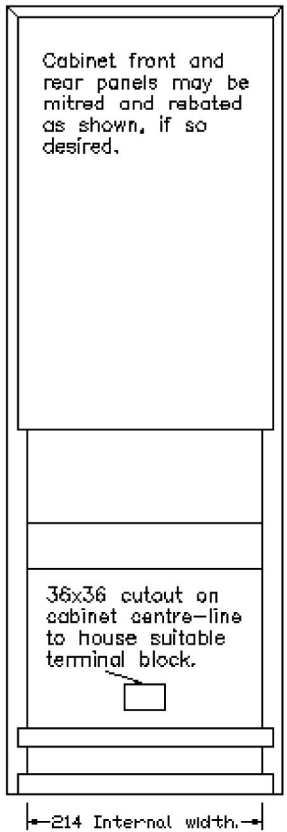

Rear View.

Material: 18mm MDF unless stated otherwise.
See cutting list/dwg for corner block details.

Note: Dimensions marked © are important.